Carry All Box

Loading at ideal height

Information

- Dimensions 147cm length x 69cm height x 52cm width
- Colour white
- Capacity 450L

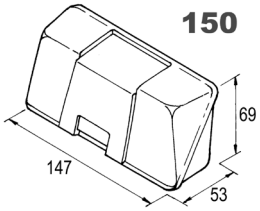

Specs

- Mounting with or without a bike rack
- Very solid ABS+
- Extremely user-friendly because of its mounting height. The box can either be mounted on a bike carrier with 3 rails or directly onto the special carrier frame on the rear panel.
- The luggage is protected by means of an elastic protective net.
- Note: when mounting onto a bike rack, the maximum loading capacity is determined by the maximum loading capacity of the bike rack minus the weight of the box.

References

307606	Carry All Box 150
308138	Mounting frame for Carry All Box

Spare parts

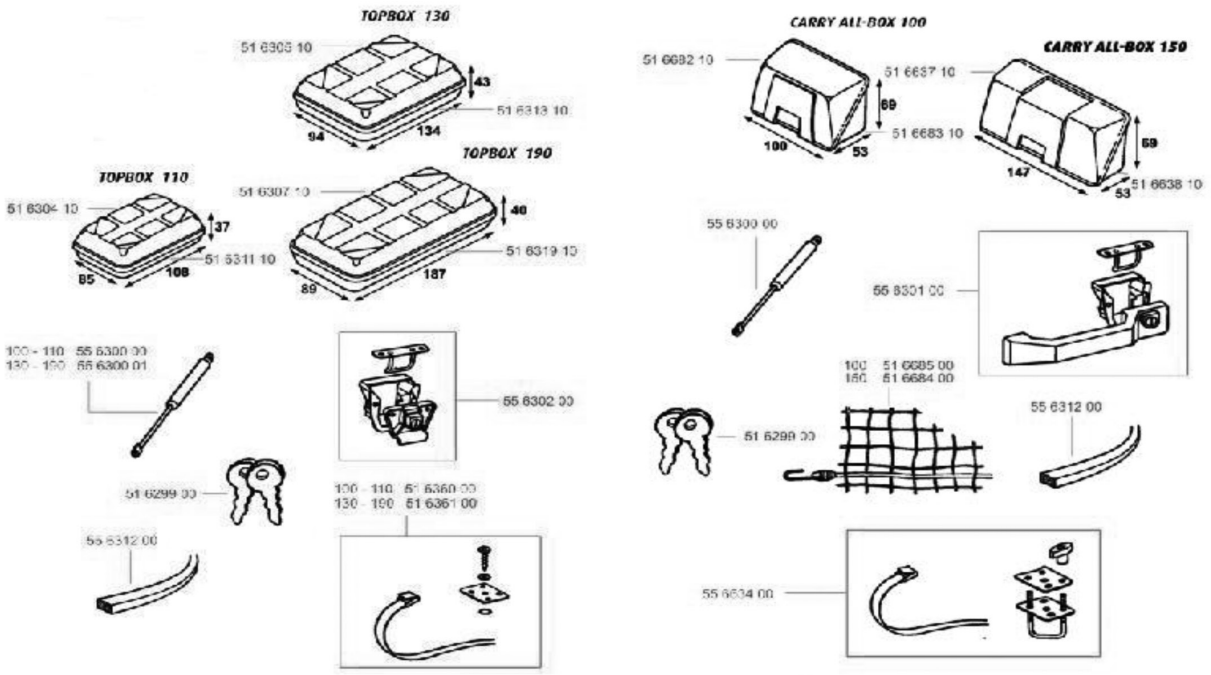

	ART.NR.	DESCRIPTION
51629900	1500600377	SET OF 2 KEYS TOP-BOX
51630410	1500601725	TO BOX 110 COVER WHITE
51630510	1500601723	TOP BOX 130 COVER WHITE
51630710	1500601404	TOP BOX COVER 190CM
51631110	1500601724	TOP BOX 110 BOTTOM WHITE
51631310	1500601722	TOP BOX 130 BOTTOM WHITE
51631910	1500601721	TOP BOX 190 BOTTOM WHITE
51636000	1500601521	INSTAL INSTR TOP BOX 110-110
51636100	1500601472	INST INSTR TOPBOX 130 190 4pc
55630000	1500601339	GASSPRING ASSY 100N
55630001	1500601340	GAS SPRING ASSY 200N
55630200	1500601343	LOCK+PROTECTION+HOOK CLASS/TB
55631200	1500601349	FOAM RUBBER CLASS/CARALL/COMBI
51663710	1500601728	CARRY ALL BOX 150 COVER WHITE
51663810	1500601727	CARRY ALL BOX 150 BOTTOM WHITE
51668210	1500600441	CARRY ALL BOX 100 COVER
51668310	1500601726	CARRY ALL BOX 100 BOTTOM
51668400	1500600442	MESHED NET ASSY FOR CA BOX 150
51668500	1500601524	MESHED NAT ASSY CA BOX 100
55630100	1500601342	LOCK+PROTECTION+HOOK COM/CARAL
55663400	1500601353	FIXAT. MATERIAL CARRY ALL 4PC