2013

Thule Omnistor 2000

Small vehicles

Information

- Installation: into the existing rail or using the special adapters
- Awning's length: 1.90m up to 3m
- Fabric projection: 1.30m up to 2.15m
- Cassette colours: White
- Fabric colours: 04 – Alaska grey
  22 – Uni grey
- Weight: 11kg up to 17.50kg

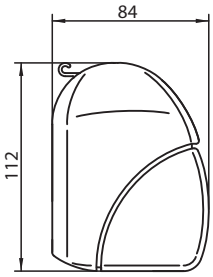

Specs

- Operated manually and retracted automatically (roll-in system).
- Fitted with a manual lock system and a security lock: awning cannot be opened until the safety lock is released.
- Ideal for caravans. smaller vehicles and passenger vehicles.

Related products

- Thule Windscreen
- Thule Safari Room
- Thule Rain Blocker side panels (only on the VW T4)
- Thule Hold Down Kit
- Thule LED Strip

Product references Thule Omnistor 2000

PRODUCT REF.	CASSETTE	FABRIC	LENGTH	PROJECTION	NET WEIGHT
307401	white	04 Alaska Grey	1.90m	1.30m	11kg
307404	white	22 Uni Grey	1.90m	1.30m	11kg
307407	white	04 Alaska Grey	2.60m	2.00m	14.5kg
307410	white	22 Uni Grey	2.60m	2.00m	14.5kg
307413	white	04 Alaska Grey	3.00m	2.15m	17.5kg
307416	white	22 Uni Grey	3.00m	2.15m	17.5kg

All mounting instructions are available on
thule.com > Products > RV accessories > Awnings > Product > Technical Information

Spare parts Thule Omnistor 2000

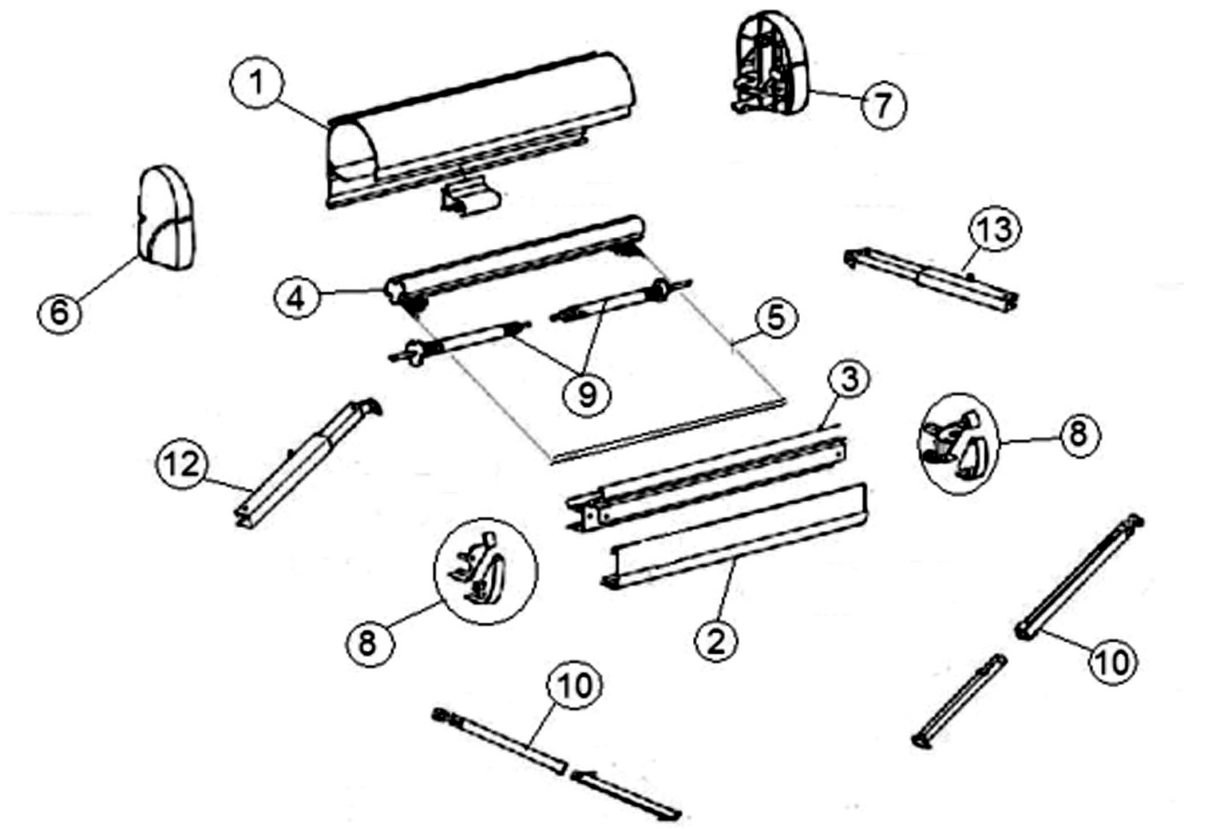

	ART.NR.	DESCRIPTION
1	1500600742	MAIN HOUSING 2000 1.90M
	1500600743	MAIN HOUSING 2000 2.60M
	1500600744	MAIN HOUSING 2000 3.00M
2	1500600745	COVER LEAD RAIL 2000 1.90M
	1500600746	COVER LEAD RAIL 2000 2.60M
	1500600747	COVER LEAD RAIL 2000 3.00M
3	1500600748	INSIDE LEAD RAIL 2000 1.90M
	1500600749	INSIDE LEAD RAIL 2000 2.60M
	1500600750	INSIDE LEAD RAIL 2000 3.00M
4	1500600751	ROLLER TUBE 2000 1.90M
	1500600752	ROLLER TUBE 2000 2.60M
	1500600753	ROLLER TUBE 2000 3.00M
5	1500602325	FABRIC 1.90M 2000 04
	1500600758	FABRIC 1.90M 2000 22 RAL 9002
	1500602326	FABRIC 2,60M 2000 04
	1500600762	FABRIC 2,60M 2000 22 RAL 9002
	1500602180	FABRIC 3,00M 2000 04
	1500600767	FABRIC 3.00M 2000 22 RAL 9002
6	1500601196	LH COVER ASSY OMNISTOR 2000
7	1500601197	RH COVER ASSY OMNISTOR 2000
8	1500601198	LH+RH END PLATE LEAD RAIL 2000

	ART.NR.	DESCRIPTION
9	1500601199	LH + RH TORSION ASSY 2000
10	1500601588	SUPPORT ARM V2 1.90M
	1500601960	SUPPORT ARM V2 2.60M XL
	1500601611	SUPPORT ARM V2 3.00M
12	1500601323	LH RAFTER ARM ASSY 1.90M 2000
	1500601324	LH RAFTER ARM ASSY 2.60M 2000
	1500601325	LH RAFTER ARM ASSY 3.00M 2000
13	1500601326	RH RAFTER ARM ASSY 2000 1.90M
	1500601327	RH RAFTER ARM ASSY 2000 2.60M
	1500601328	RH RAFTER ARM ASSY 2000 3.00M